videoaviation.com

1/32 RESIN MODELLING ACCESSORIES MADE IN ITALY

# U.S. NAVY MARINES MUNITIONS TRANSPORTER

## MODEL ASSEMBLY INSTRUCTIONS

MODELLING EXPERIENCE REQUIRED
DON'T INHALE RESIN DUST - USE PROPER MASK
NOT FOR AGE UNDER 10 - THIS IS NOT A TOY
USE SUPER GLUE (CYANOACRYLATE) TO GLUE THE PARTS

## RESIN PARTS

2210232

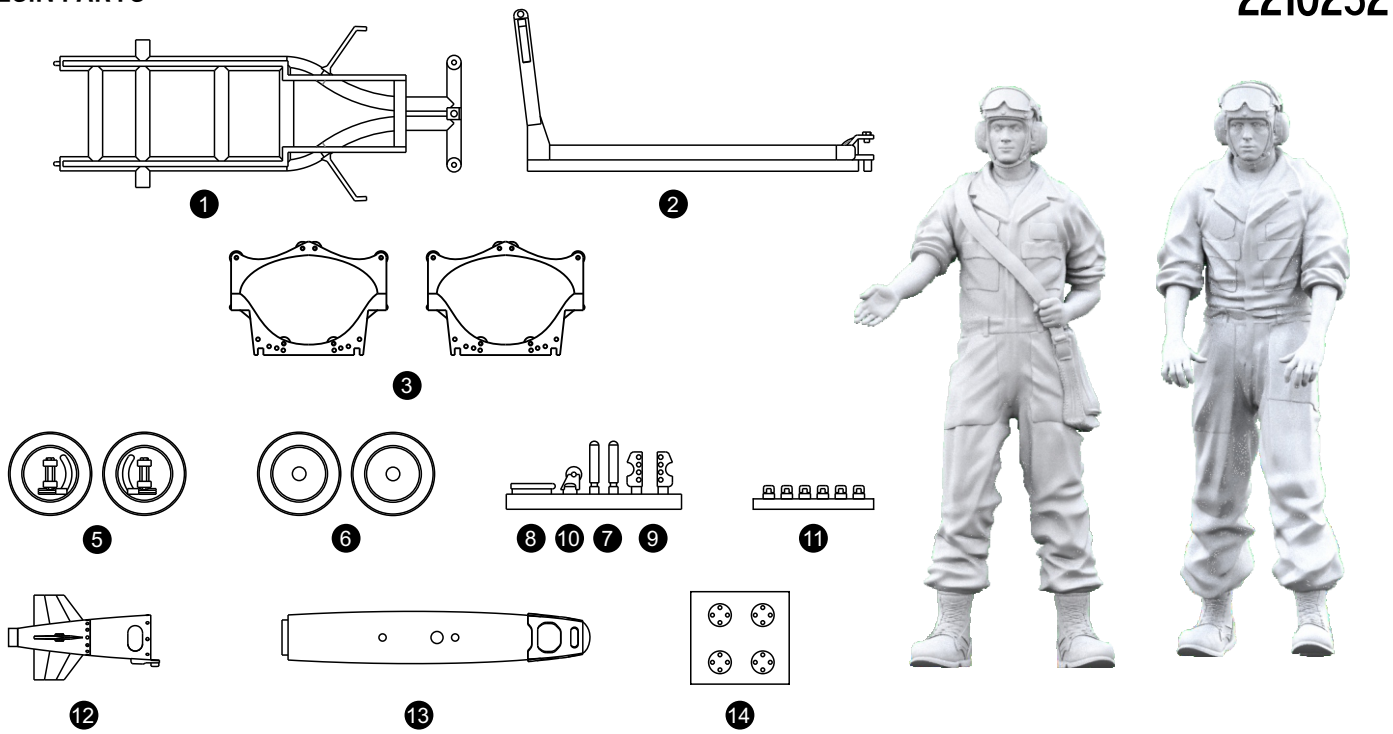


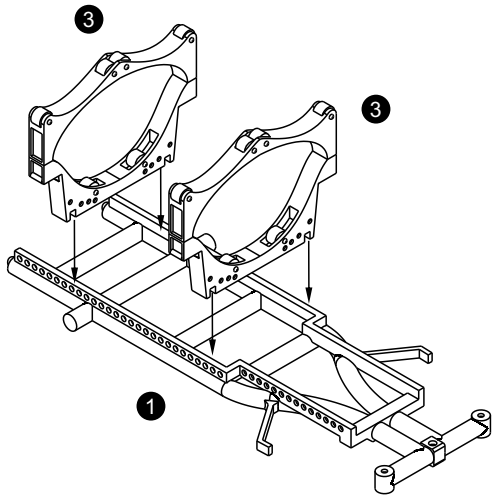


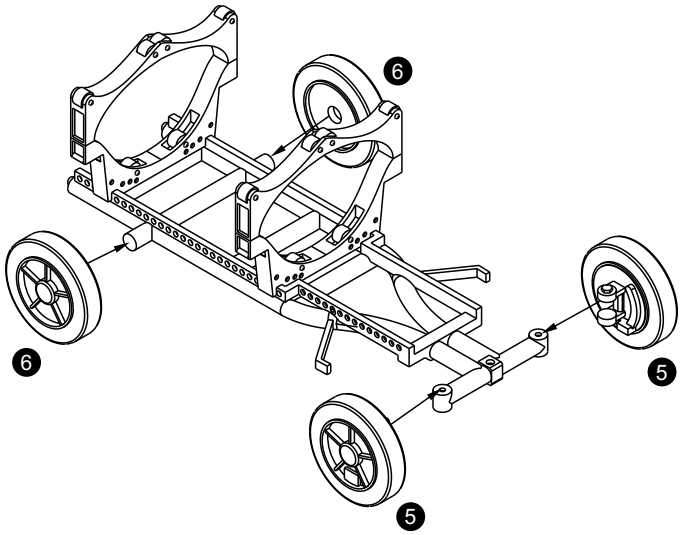


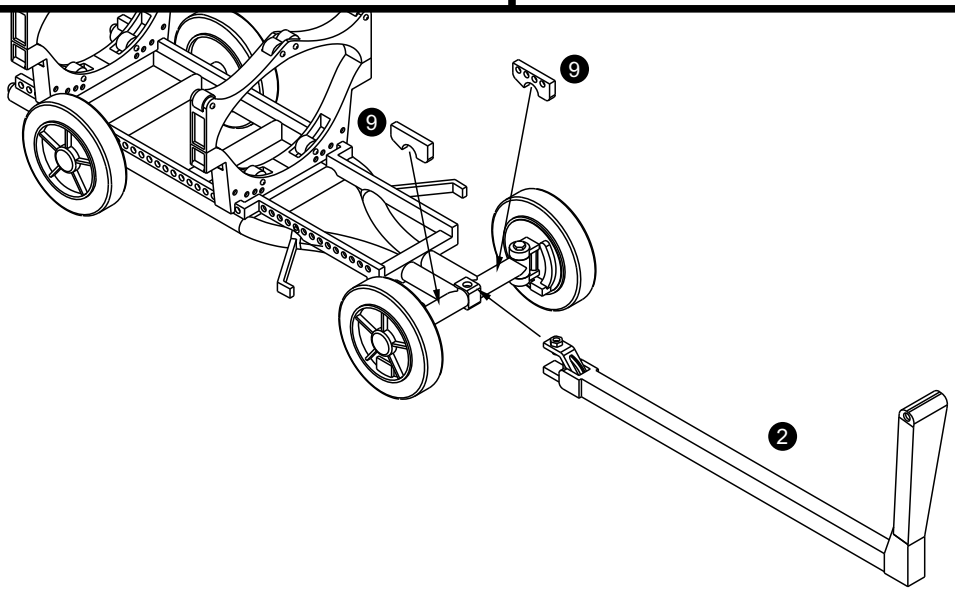

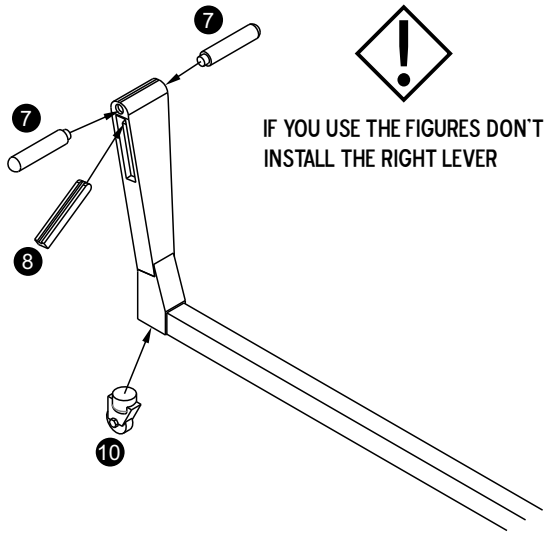


IF YOU USE THE FIGURES DON'T INSTALL THE RIGHT LEVER

## GPS ANTENNA

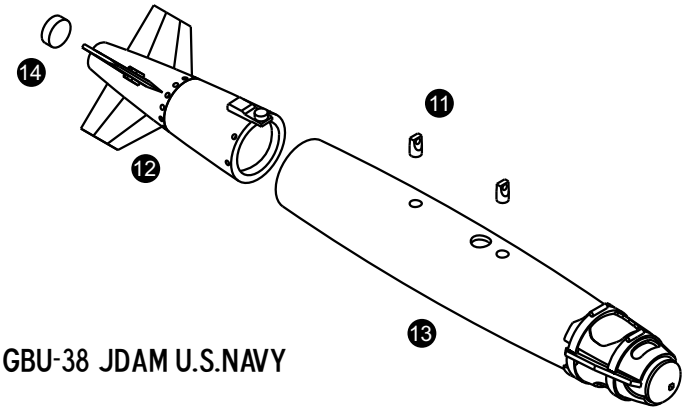


GBU-38 JDAM U.S.NAVY

## MHU-191/M PAINTING & DECAL PLACEMENT

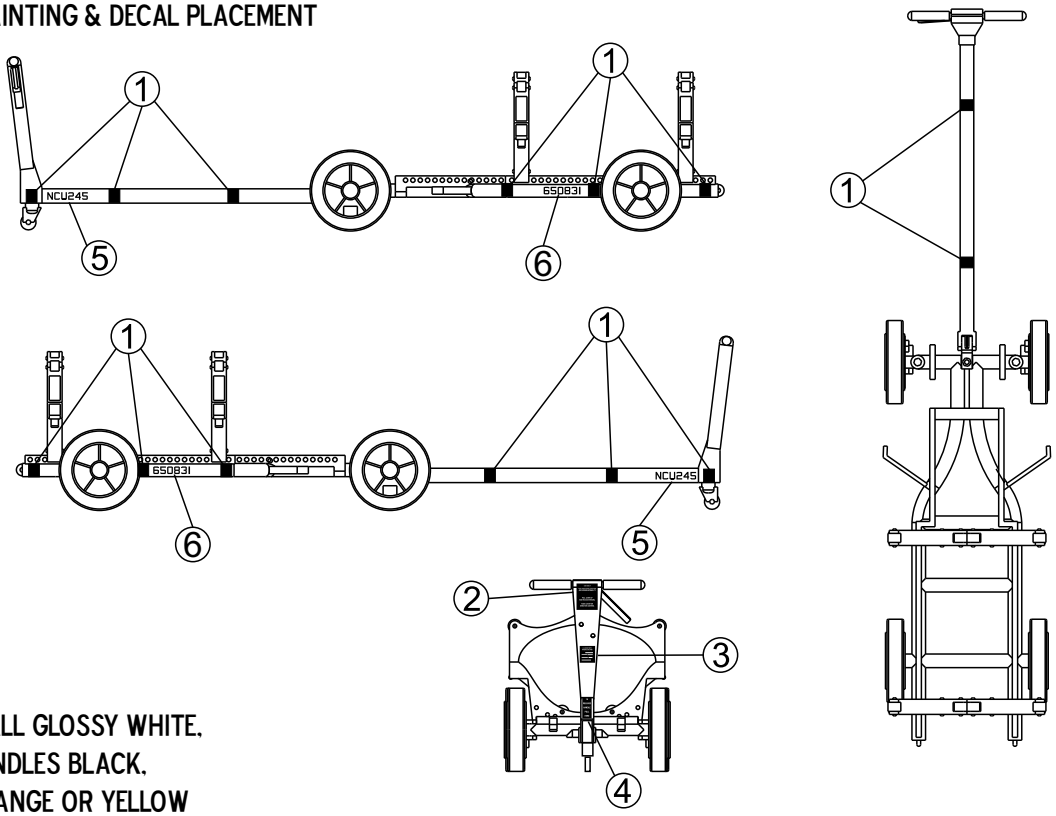


PAINT OVERALL GLOSSY WHITE.
TYRES & HANDLES BLACK.
ROLLERS ORANGE OR YELLOW

## GBU-38 JDAM U.S.NAVY

MK82 WARHEAD
2 BANDS
YELLOW: LIVE
BLUE: INERT

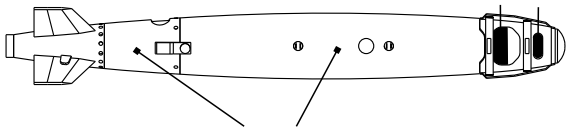

BODY & TAIL
FS 36375 LIGHT GHOST GRAY

NOSE PLUG
FS 34087 OLIVE GREEN OR
FS 36375 LIGHT GHOST GRAY

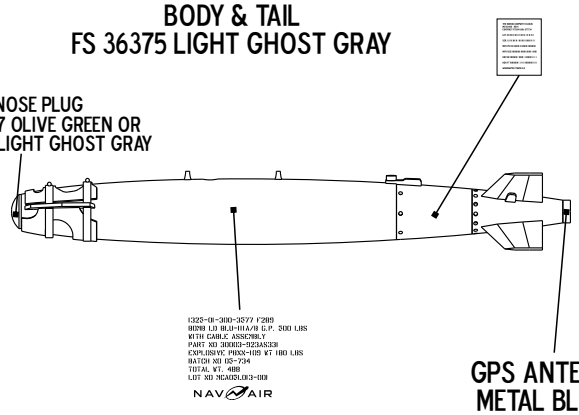


GPS ANTENNA
METAL BLACK

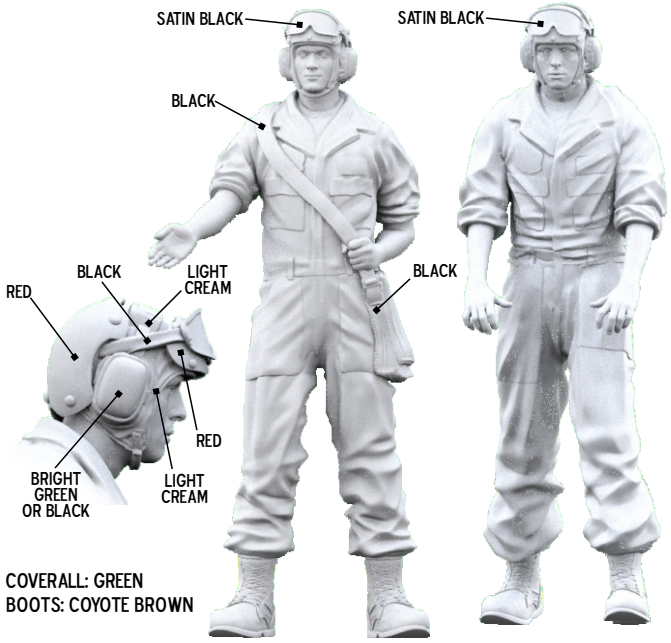


COVERALL: GREEN
BOOTS: COYOTE BROWN

J.E
LCPL
MILLER
USMC

AAC-837
AWB-388
AAB-725

LOCKER
NOT A PAYWAY
OFFICIAL BUSINESS ON

Red Bull

AVENGERS